(No Model.)

2 Sheets—Sheet 1.

J. PFEIFER.

ADDING MACHINE.

No. 400,359

Patented Mar. 26, 1889.

Fig. 1

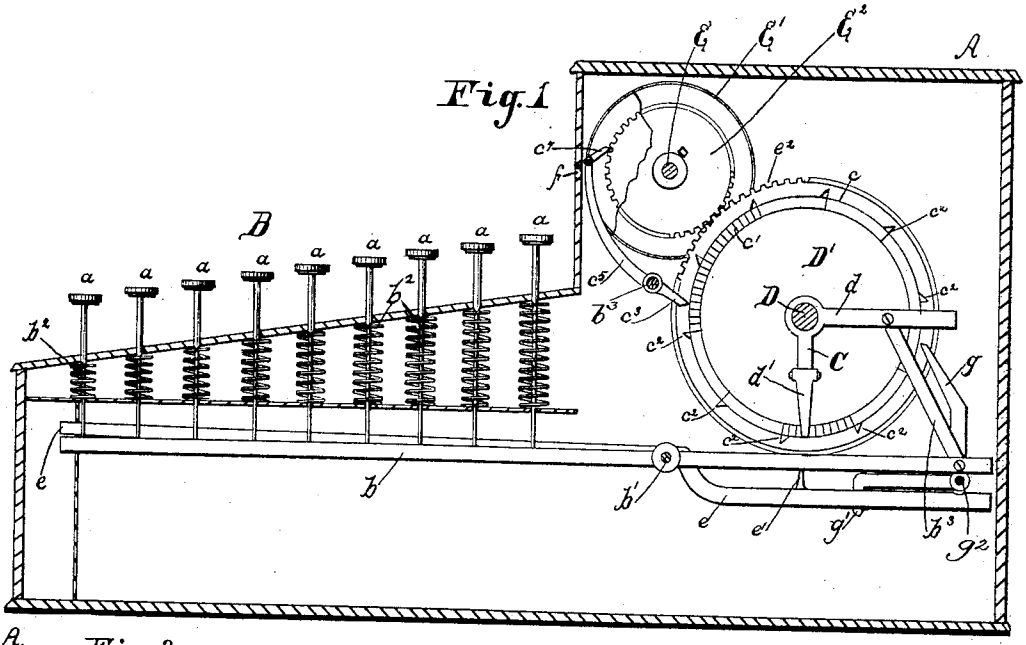

Fig. 3

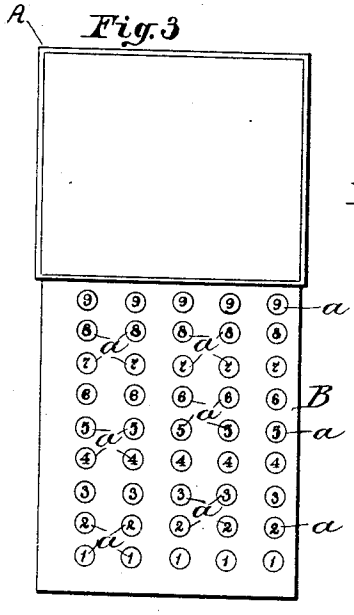

Fig. 2

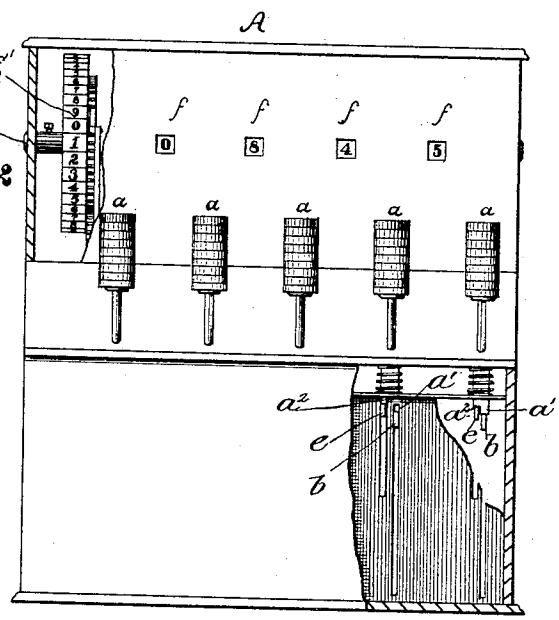

Fig. 4

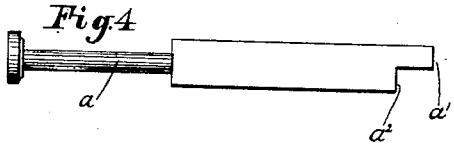

Witnesses

Chas. H. Brosius

W. S. Grove

Inventor

John Pfeifer

N. PETERS, Photo-Lithographer, Washington, D. C.

(No Model.)

2 Sheets—Sheet 2.

J. PFEIFER.

ADDING MACHINE.

No. 400,359.

Patented Mar. 26, 1889

Fig. 5

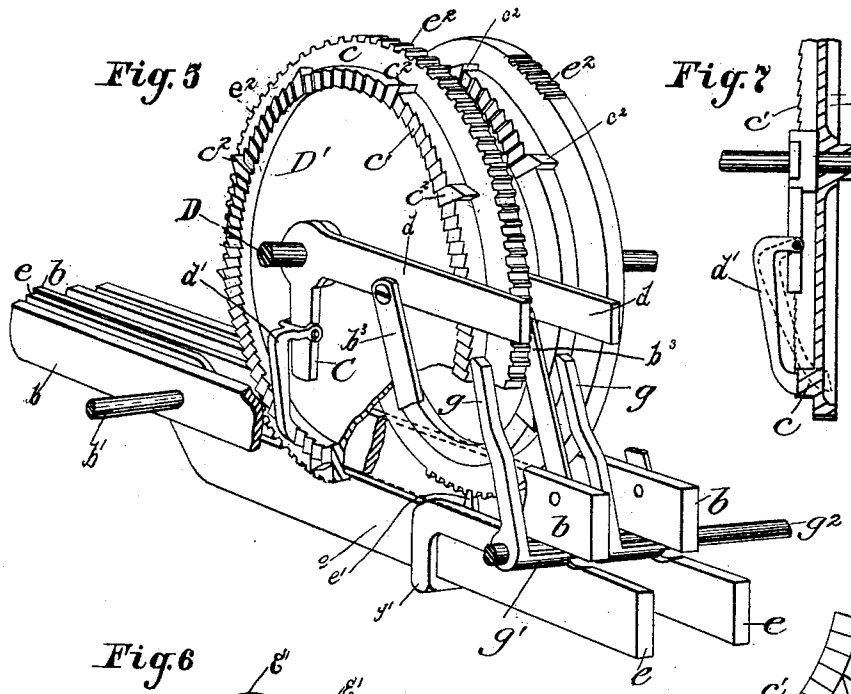

Fig. 7

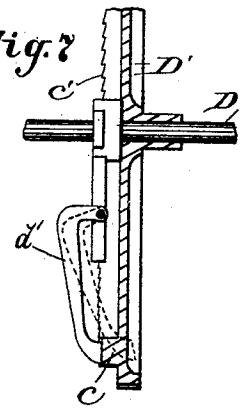

Fig. 6

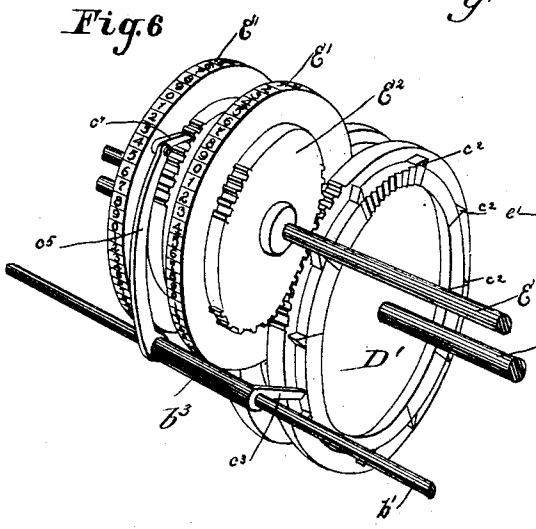

Fig. 8

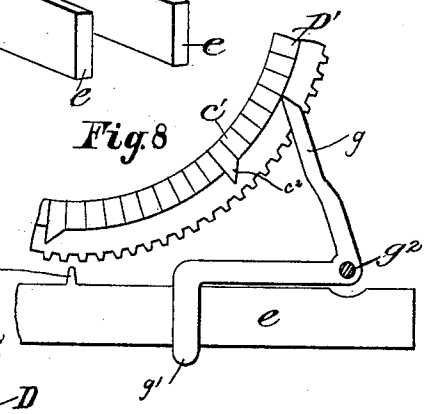

Witnesses,

Chas. H. Crescin

W. J. Grove

Inventor,

John Pfeifer

N. PETERS, Photo-Lithographer, Washington, D. C.

UNITED STATES PATENT OFFICE.

JOHN PFEIFER, OF SPRINGFIELD, OHIO.

ADDING-MACHINE.

SPECIFICATION forming part of Letters Patent No. 400,359, dated March 26, 1889.

Application filed August 29, 1888. Serial No. 284,070. (No model.)

To all whom it may concern:

Be it known that I, JOHN PFEIFER, a citizen of the United States, residing at Springfield, in the county of Clark and State of Ohio, have invented certain new and useful Improvements in Adding-Machines, of which the following is a specification.

My invention relates to improvements in adding-machines.

The object of my invention is to provide a machine by which the operation of adding a column of figures may be reduced to a mechanical operation, the result being attained with mechanical accuracy.

My invention consists in the various constructions and combinations of parts, hereinafter described, and pointed out in the claims.

In the accompanying drawings, which form a part of this specification, Figure 1 is a longitudinal sectional elevation view of a machine embodying my invention. Fig. 2 is an end elevation view of the same, some of the parts being broken away to show the interior mechanism. Fig. 3 is a plan view showing the arrangement of the key-board. Fig. 4 is a detail view of one of the keys. Fig. 5 is a perspective view of a clutch and trip mechanism for operating the counting-wheels, some of the parts being broken away to better illustrate the operation of the same. Fig. 6 is a perspective view in detail of different portions of the same. Fig. 7 is a partial sectional elevation view of the clutch mechanism. Fig. 8 is a side elevation view in detail of a portion of the stop mechanism, hereinafter referred to.

Like parts are indicated by similar letters of reference throughout the several views.

In the said drawings, A represents the outer casing, which incloses the operating parts.

B is a key-board, which is provided with a series of keys, *a*, arranged in rows longitudinally along said key-board, each row of keys being numbered in series from 1 to 9, respectively, and as many rows being provided as there are figures across the column to be added. The keys *a a* in each row rest on an operating-lever, *b*, pivoted at *b'*, and connected at its rear end to a clutch, C. A small spring, b^2, is provided about the stem of each key to return it to its normal position. The weight of the operating-lever *b* in relation to the pivotal point is so arranged that it will return by gravity to its normal position after being pressed down by one of the keys in the row to which it corresponds, there being one operating-lever for each row of keys.

Arranged across the machine above the projecting ends of the operating-levers *b*, and journaled loosely on a transverse shaft, D, are counting-wheels D', there being one counting-wheel for each operating-lever, therefore for each row of keys. The counting-wheels D' are each provided with a laterally-projecting rim, *c*, having on its face a series of notches or ratchet-teeth, *c'*, there being exactly one hundred teeth on the said rim. The clutch C, which consists of a bell-crank lever, *d*, having a pivoted pawl, *d'*, connected to one arm thereof, is adapted to engage with teeth on the rim *c* of said counting-wheel. Each of the clutches C is connected to its operating-lever by small links b^3, so that as the operating-lever is depressed at one end by one of the keys of its series the clutch is correspondingly moved upon the shaft D, on which it is pivoted, and, engaging with the counting-wheel D', carries the same around on said shaft to a distance corresponding to the depression of the lever by said key.

Each of the keys of a particular row is adapted to be moved to a certain distance and stop, and thus move the counting-wheel a portion of a revolution corresponding to the particular key. For instance, the key marked 1 is adapted to be stopped, so that the clutch C will move the counting-wheel a distance equal to just one notch of the series *c'*. The key marked 2 will move the operating-lever sufficiently to advance two notches, and so on, each key depressed being adapted to move the wheel a number of notches corresponding to the number thereon. Now, in order to provide for stopping the counting-wheel when moved the number of notches corresponding to the number of the key, I provide a second lever, *e*, arranged parallel with the operating-lever *b* and pivoted on the same transverse shaft, *b'*. This stop-lever *e* is provided with a small projection, *e'*, adapted to engage with teeth e^2 on the periphery of the count-

ing-wheel, the number of teeth on the periphery of the wheel being exactly the same as the notches on the face of the projecting ring *c*.

Each key *a* is provided at the lower end of its stem with two bearing-faces, a' a^2, separated from each other by a distance corresponding with the distance the key is to be depressed. One of these bearing-faces, a', is adapted to operate on the operating-lever *b*. The other, a^2, is adapted when the key is depressed to come against the stop-lever *e* and force the same into engagement with the teeth on the periphery of the wheel, and thus stop said wheel when the same has moved a distance equal to the number of notches corresponding to the number on said key. It will thus be seen that as each key is depressed the counting-wheel is advanced a number of notches corresponding to number on said key, the entire distance which the wheel moves by a series of depressions of the said keys being equal to the sum of the numbers read on the said keys.

Located on the transverse shaft E, just above the key-board and within the casing A, is a series of indicating-wheels, E′, each provided with a gear-wheel, E^2, adapted to engage with the teeth e^2 on the periphery of the counting-wheel. These indicating-wheels E′ are preferably made smaller than the counting-wheels, and are provided on their periphery with numbers in series from 0 to 9, four series, or forty in all, being preferably used. The gear E^2 is provided with a number of teeth corresponding to the whole number of figures on the periphery of said wheel. Each of the indicating-wheels E′ stands opposite an opening, *f*, in the front of the casing A, through which the numeral on the periphery of said wheel is adapted to show. It will be seen that as each key of the row is depressed the numeral corresponding to that key will be moved, so as to appear at the opening *f* in the casing.

The projecting rim *c* of the counting-wheel D′ is provided on its periphery with a series of projections, c^2, there being one projection for every ten notches on the face of said rim. Located within the casing A and pivoted on a suitable rod, b'', are bell-crank levers b^3, one for each counting-wheel. The projections c^2 are adapted as the arm is moved to come in contact with the arm c^3 of the bell-crank lever b^3 opposite thereto, the other arm, c^5, on said bell-crank lever being provided with a pawl, c^7, adapted to engage with the teeth of the gear E^2 of the indicating-wheel of the next succeeding series. The projection c^2 is made of sufficient size so that the bell-crank lever will be moved just sufficiently to advance the indicating-wheel of the next succeeding series just one notch. Hence every time ten notches are counted off by the counting-wheel the indicating-wheel of the next succeeding series will be moved one point.

It will be understood that the different indicating-wheels of a series with the different counting-wheels, operating-lever, and row of keys extend to the units, tens, hundreds, &c., of a column of figures to be added, each counting-wheel and indicating-wheel being arranged, as above described, so that every ten notches counted off on one wheel will produce a movement equal to one notch of the wheel of the next higher order.

Now, in order to prevent the indicating-wheel of the tens-column from being moved more than one notch when ten notches are counted off of the indicating-wheel of the units-column, I provide a second bell-crank lever, *g*, pivoted on the rod g^2, one arm of which is adapted to be engaged by the projections c^2 immediately after one of said projections engages the arm c^3 of the operating bell-crank, the other arm, g', of said bell-crank being projected under the stop-lever *e*, located under the tens or next succeeding column. By this construction as soon as the indicating-wheel has moved one notch through the operation of the arm c^5 of the bell-crank lever the stop projection e' of its counting-wheel will be brought in contact with the teeth on said indicating-wheel, and thus prevent further revolution thereof.

The clutch C, as above described, is provided with a pawl, d', pivoted to a bell-crank arm, *d*, and engages with ratchet-teeth on the face of the projecting rim *c*. This pawl d' is formed slightly U-shaped, as shown in Fig. 7, and is bifurcated at one end and pivoted to the bell-crank arm *d* at a point within the rim *c*, so that the outer end of said pawl d' by gravity always remains in contact with the teeth of said rim, the tendency of said pawl being to fall considerably beyond the face of said rim, as indicated in dotted lines in Fig. 7. By this construction the engagement of the said pawl is insured without the use of springs or other devices likely to become disarranged or impaired by use.

The operation of the device as above described, it is thought, will be readily understood. As each key is depressed the counting-wheel corresponding to the operating-lever of said key is moved a number of notches represented on said key. As each counting-wheel is revolved the number of notches which it moves is registered at the opening *f*. When either counting-wheel moves ten notches, the next succeeding counting-wheel and its indicating-wheel are moved one notch.

In adding a column of figures the key in the units-row corresponding to each figure in the units-column is depressed, and the result will be registered by the indicating-wheels through the openings *f*. The keys in the tens-row corresponding to each figure in the tens-column are then depressed with a similar result, the indicating-wheel of the units-column remaining unchanged while the other indicating-wheels are moved corresponding to the numbers on the depressed keys. The operation is continued for each column representing hundreds, thousands, &c., the result

of any addition being disclosed by the indicating-wheels as they appear at the openings *f* above and in front of the key-board.

I preferably provide one more indicating-wheel E′ than there are rows of keys, thus giving greater latitude to the number of figures in the respective columns which may be added, if desired. Two more indicating-wheels may be applied, if desired, thus increasing the capacity of the machine still further without increasing the number of keys. It is of course understood that any number of rows of keys may be employed to adapt the machine to columns of figures of greater denominations.

The machine as above described, it will be seen, is simple in its construction and accurate in its operation, the result of every addition being shown at once by the indicating-wheels after the addition is completed.

It will be understood that before beginning an addition each of the indicating-wheels should be turned so that zero or 0 appears at its opening. This is accomplished by depressing the key of said indicating-wheel which corresponds to the difference between the number appearing at the opening and ten. For instance, if the figure 6 appears at the opening of any indicating-wheel, by depressing the key marked 4 of the series corresponding to that wheel, zero or 0 will appear on the wheel at the opening and the machine be ready for operation for a new column of figures.

Having thus described my invention, I claim—

1. The combination, in an adding-machine, with a counting-wheel, a clutch mechanism, and its operating-lever, of a stop-lever arranged parallel with said operating-lever and pivoted so as to move in a parallel plane therewith, and a series of keys arranged over said levers, said key-stems each being provided with two bearing-faces adapted to engage the respective levers, whereby the stop-lever is forced into an engagement with the counting-wheel when the key is depressed sufficiently to turn said counting-wheel a number of notches corresponding to the number on the said key, substantially as specified.

2. The combination, in an adding-machine, with a counting-wheel and its operating-lever and a series of keys over said operating-lever, of indicating-wheels geared to said counting-wheel, a stop-lever pivoted alongside of said operating-lever, the key-stems being provided with different bearing-faces adapted to engage said operating and stop levers, substantially as and for the purpose set forth.

3. The combination, with an operating-lever and its keys, as described, of a counting-wheel having a laterally-projecting rim and ratchet-teeth on the face thereof, and a clutch mechanism consisting of a bell-crank and a pivoted pawl connected to said operating-lever and adapted to engage with the teeth on said projecting rim, said pawl being pivoted within said rim and extended outwardly and downwardly, so as to engage by gravity with the teeth on said rim, substantially as specified.

4. The combination, with the counting-wheels, the indicating-wheels geared thereto, and a laterally-projecting rim with projections on the periphery thereof, of a bell-crank lever adapted to be engaged on one arm by said projections and at the other to engage with the indicating-wheel of the next higher order, and a stop-lever connection adapted to be engaged by said projections and thus stop the counting-wheel of the next higher order when its indicating-wheel has moved one notch, substantially as specified.

5. The combination, in an adding-machine of the outer casing, of the keys arranged in series, the operating-levers under said keys, counting-wheels connected to said levers by suitable clutch mechanism, indicating-wheels geared to said counting-wheels, said indicating-wheels being provided with numerals on the periphery thereof adapted to show through openings in said casing, stop-levers alongside of said operating-lever and adapted to be engaged by a bearing-face on the key-stems and provided with projections adapted to engage and stop said counting-wheels when each key is depressed to the proper distance, and operating mechanism adapted to move the indicating-wheel of one column when the counting-wheel of the next preceding column has moved ten notches, and stop mechanism adapted to stop said counting-wheel when it has moved one notch of the next succeeding indicating-wheel.

In testimony whereof I have hereunto set my hand this 25th day of August, A. D. 1888.

JOHN PFEIFER.

Witnesses:
JOSHUA SCOTT,
W. I. GROVE.